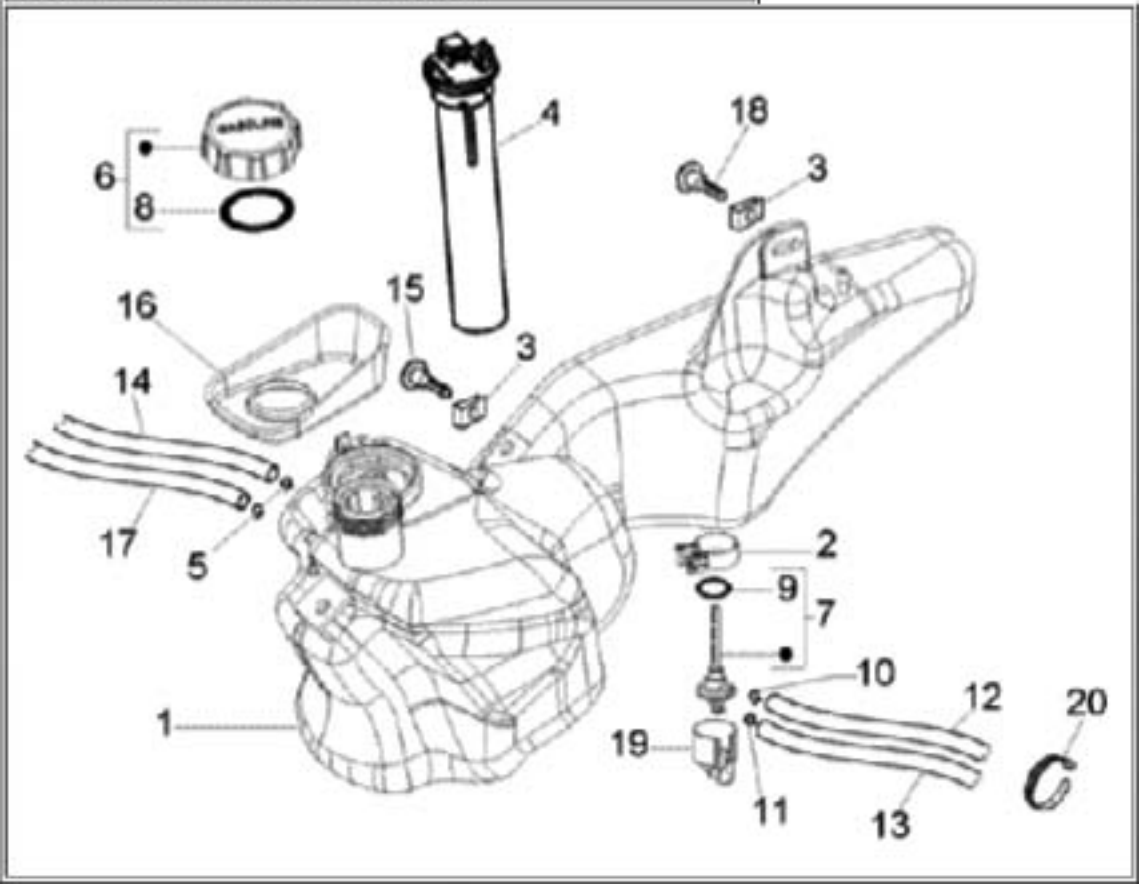A47280 - FUEL TANK LB200RST